MATERIALS OF CONSTRUCTION
- ENCLOSURE – ALUMINIUM GrD LM6 (< 6% Mg)
- DRIVE SHAFT – STAINLESS STEEL
- FASTENERS – STAINLESS STEEL
- BEARINGS – HIGH DUTY ACETAL
- SEALS – SILICONE
- FINISH – BLUE POLYESTER (INSIDE AND OUT)

PROXIMITY SENSORS – 2 OFF PEPPERL & FUCHS NJ2–12GK–SN
SWITCH CAMS – SPLINE DRIVEN "Kwiklok" SYSTEM
TERMINAL STRIPS – HIGH GRADE MELAMINE
MOUNTING AND DRIVE FORMAT – VDI/VDE 3845 F05
INGRESS PROTECTION – IP67 DUST PROOF, WATER PROOF
CERTIFCATION CATEGORY – Ⓔx II 2 GD
CERTIFICATES – Baseefa 03 ATEX 0336 & IECEx BAS 10.0088, TYPE: SLP020D–IEC
Ex ia IIC T5/T6 Gb
Ex tb IIIC T100°C/T85°C Db IP6X (–40°C≤Ta≤+60°C/+45°C)
COMPLIANT WITH EC DIRECTIVES FOR ELECTROMAGNETIC COMPATIBILITY
SUITABLE FOR LOW & HIGH DEMAND SCENARIO APPLICATIONS AT SIL 3 OF IEC 61508

FAILURE TO PROVIDE THE ANNUNCIATED FUNCTION

		LOW DEMAND			HIGH DEMAND	
	SFF%	F rate/hr	PFD*	SIL	F rate pa	SIL
P+F with Fail Safe i/f	97	0.0011 10E-6	4.8 10E-6	3	9.6 10E-6	3

SPURIOUS ANNUNCIATION

	F rate pa
P+F F/S (SPURIOUS HIGH)	4.4 10E–4

In safety–related applications the sensor must be operated with a qualified fail safe interface from Pepperl+Fuchs, such as KFD2–SH–EX1.

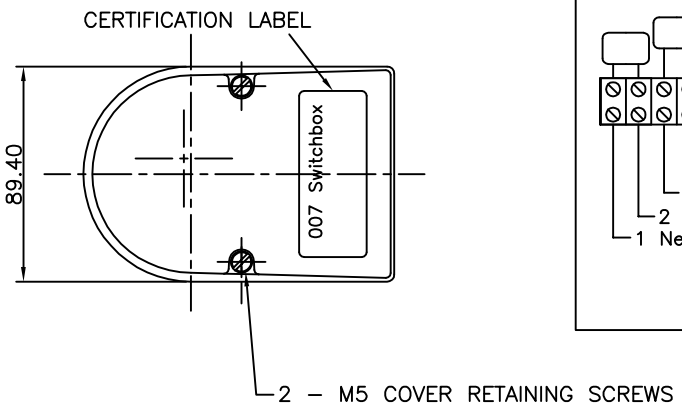

TERMINATION DETAILS.

SWITCH TYPE
PEPPERL + FUCHS NJ2–12GK–SN
Nominal Voltage 8 V DC
Output/Current consumption
≧ 3 mA Active face uncovered
≦ 1 mA Active face covered
Ui:16V Ii:52mA Pi:0.169W
Ci:120nF Li:200μH

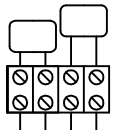

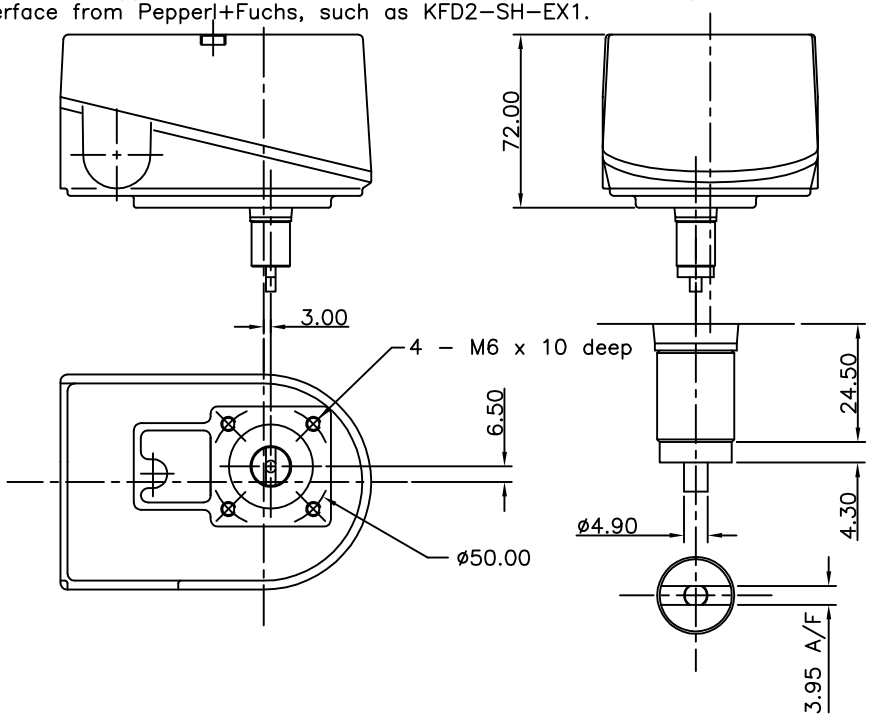

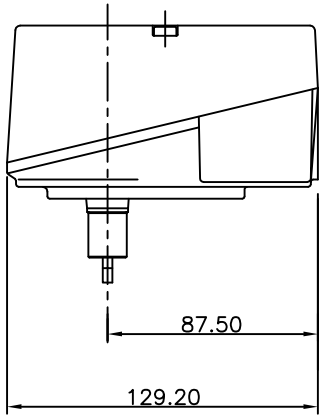

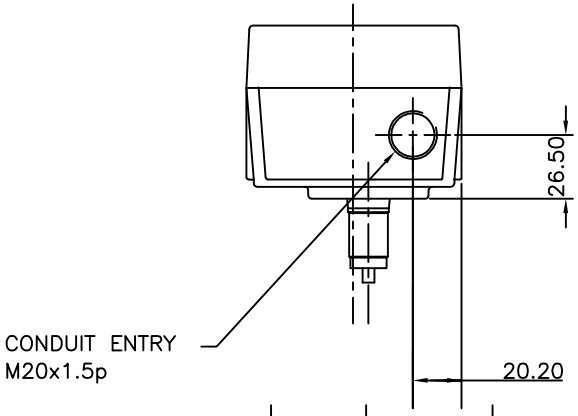

PRODUCT CODE–SBZ–02154–SIL

Rev	C/N No.	Date	Appr
5	2806	09.03.15	BEP
4	2735	30.05.14	BEP
3	2583	15.03.13	BEP
2	2243	27.08.10	BEP

K Controls Ltd
Crown Business Centre
West Drayton Middlesex
UB7 8HZ

DIMENSIONS IN mm

TITLE GENERAL ARRANGEMENT – ATEX/IECEx 007 Ex ia PROXIMITY SENSOR SWITCHBOX.

SCALE: DO NOT SCALE
PAGE 1 OF 1
DATE 12.06.09
DRAWING NO: C10726
REVISION 5

DRAWN MOD
APPR BEP

CONTROLLED COPY
UNCONTROLLED

THIS DRAWING IS THE PROPERTY OF K CONTROLS LTD. AND IS ONLY ISSUED ON THE CONDITION THAT NO COPY IS TAKEN OR REPRODUCTION OR DISCLOSURE TO A THIRD PARTY EITHER WHOLLY OR IN PART IS MADE WITHOUT THE WRITTEN CONSENT OF K CONTROLS LTD.